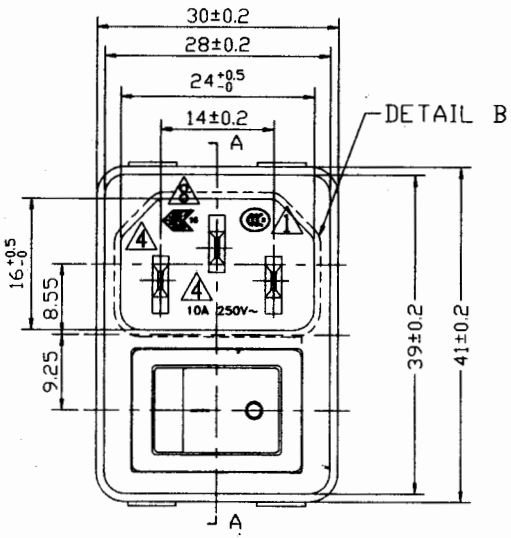

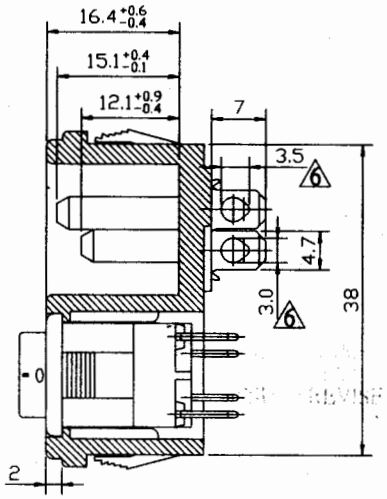

SECTION A-A

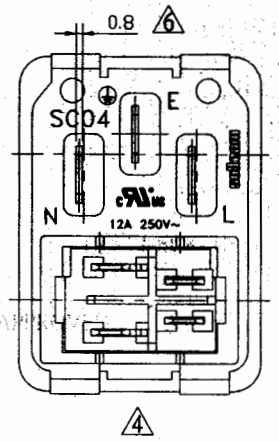

SPECIFICATION

4 UL&C-UL:10/12A 250V
ENEC 3C:10A 250V 8

INITIAL CONTACT RESISTANCE: 20mΩ(MAX)
INSULATION RESISTANCE: 100MΩ(MIN) 500 VDC
INITIAL WITHSTAND VOLTAGE:
PLEASE REFER TO SPECIFICATION-3.3
SAFETY APPROVAL : UL,ENEC,3C
EACH CERTIFICATE # PLEASE REFERRED
TO ORIGINAL CERTIFICATE

3 SPECIFICATION FOR ROCKER SWITCH
CONTACT RATING:12A 125/250VAC UL CSA
8A/100A 250V~T85 1E4
12(4)A 250V~T85 1E4
ENEC 16
SAFETY APPROVAL: CSA,UL,ENEC
EACH CERTIFICATE # PLEASE REFERRED
TO ORIGINAL CERTIFICATE
CONTACT RESISTANCE:20mΩ(MAX)INITIAL
INSULAATION RESISTANCE:500MΩ(MIN) 500VDC
PLEASE REFER TO SPECIFICATION-3.3
LIFE CYCLES:OVER 10,000 CYCLES
OPERATION: 650±150 GRAM
THE ROCKER SWITCHES RATING MUST HAVE 10A 250VAC MIN.
MATERIAL USED MUST BE COMPLY WITH BQI-0555.

東莞松騰電子有限公司
華南交付管制中心
APR 14 2011
發行章

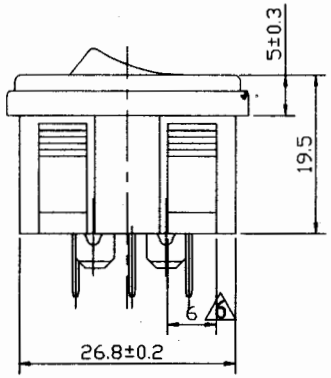

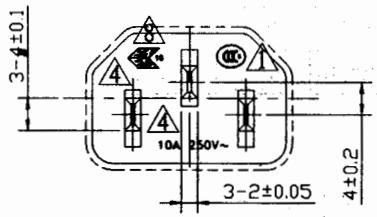

DETAIL B

MOUNTING HOLE
PANEL THICK : 0.8~2.0mm

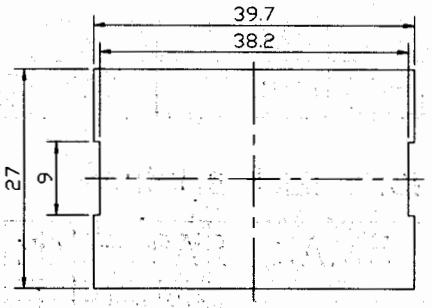

PANEL CUT-OUT

SWITCHING FUNCTION

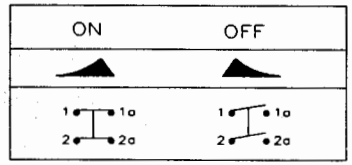

TOLERANCES UNLESS OTHERWISE	
BASIC DIMENSIONS TOLERANCES	
UP TO 10	±0.3
ABOVE 10 TO 100	±0.5
ABOVE 100	±0.8
ANGULAR DIMENSIONS	±5°

NO.	DATE	REVISION DESCRIPTION	ISSUE	REVISE	APPROVED
8	110324	ADD"ENEC"MARK;DELETE "VDE A004240 "MARK	A8	易意玲	賀尊盈
7	091119	ADD DIMENSION	A7	白紅	喻偉成
6	090802	MODIFY DRAWING	A6	白紅	李紅娟

SOLTEAM ELECTRONICS CO., LTD.

APPROVED BY	賀尊盈	DATE	110413	PROJECTION		DIMENSION UNIT mm			
CHECKED BY	李紅娟	DATE	110412	SCALE	1.2:1	PART NAME	SC04-1BWW-331 P1/2		
DRAWN BY	易意玲	DATE	040212	TYPE	Inlet Socket Module	PART NO	8A10-2205-0001 5		

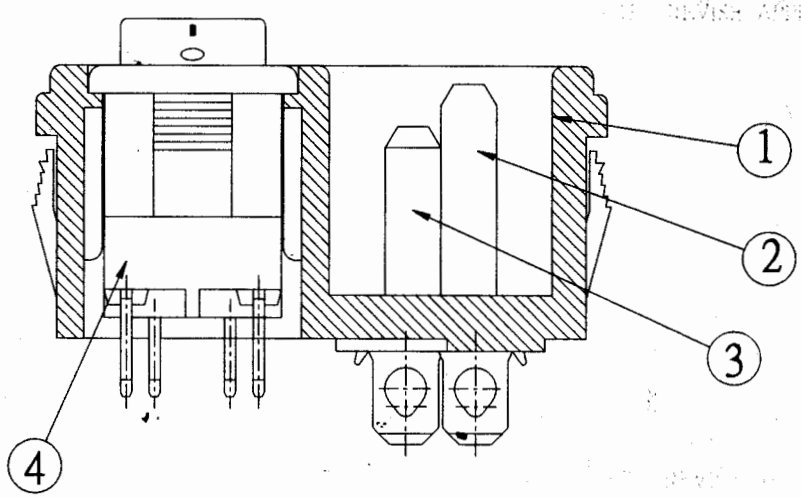

Material List Inlet Switches Model : SC04

NO.	PART NAME	MATERIAL	Q'TY
1	HOUSING	Nylon 66 (94 V-0) ⚠6	1
2	MIDDLE TERMINAL	Tin Plated Brass(3 μ m Min)	⚠6 1
3	SIDE TERMINAL	Tin Plated Brass(3 μ m Min)	⚠6 2
4	Rocker Switch	MR-22-N2BB-F2	1

APR 14 2011
發行章

NO.	DATE	REVISION DESCRIPTION	ISSUE	REVISE	APPROVED
⚠8	110324	ADD"ENEC"MARK;DELETE "VDE A004240"MARK	A8	易意玲	賀尊盈
⚠7	091119	ADD DIMENSION	A7	白紅	喻偉成
⚠6	090902	MODIFY DRAWING	A6	白紅	李紅娟

SOLTEAM ELECTRONICS CO., LTD.

APPROVED BY	賀尊盈	DATE	110413	PROJECTION		DIMENSION UNIT mm			
CHECKED BY	李紅娟	DATE	110412	SCALE	2:1	PART NAME	SC04-1BWW-331 P2/2		
DRAWN BY	易意玲	DATE	040212	TYPE	Inlet Socket Module	PART NO	8A10-2205-0001 ⚠5		